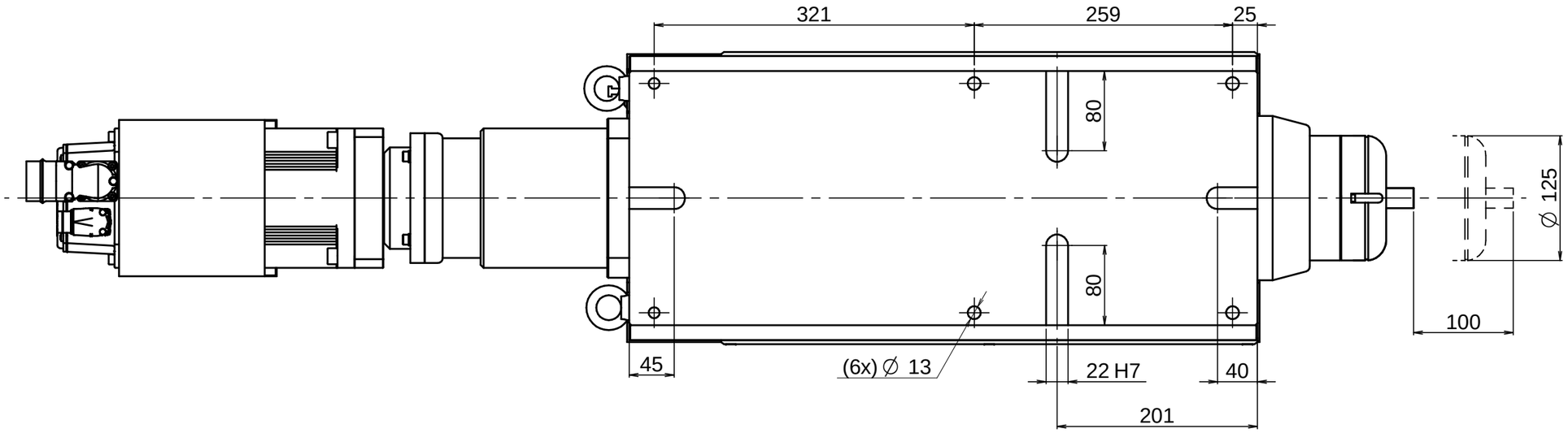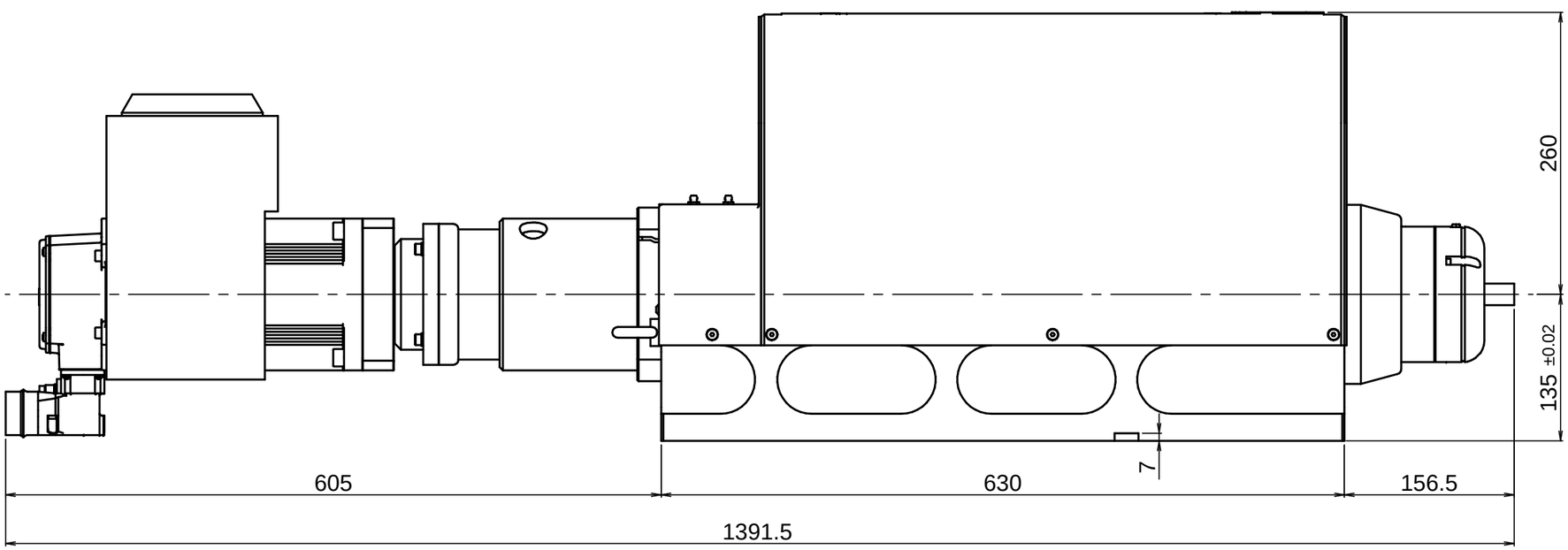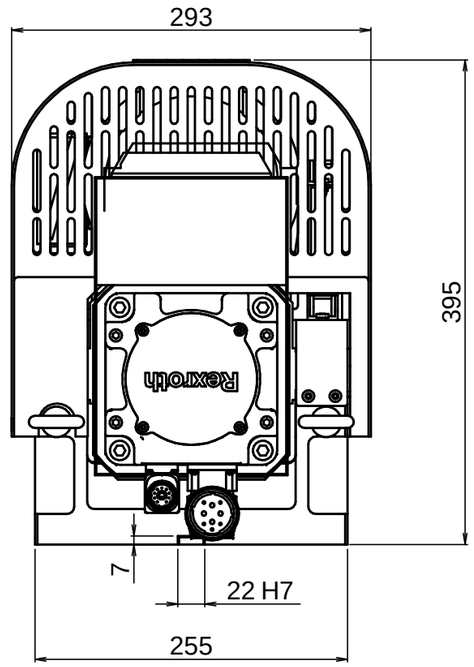AGME
Automated assembly solutions